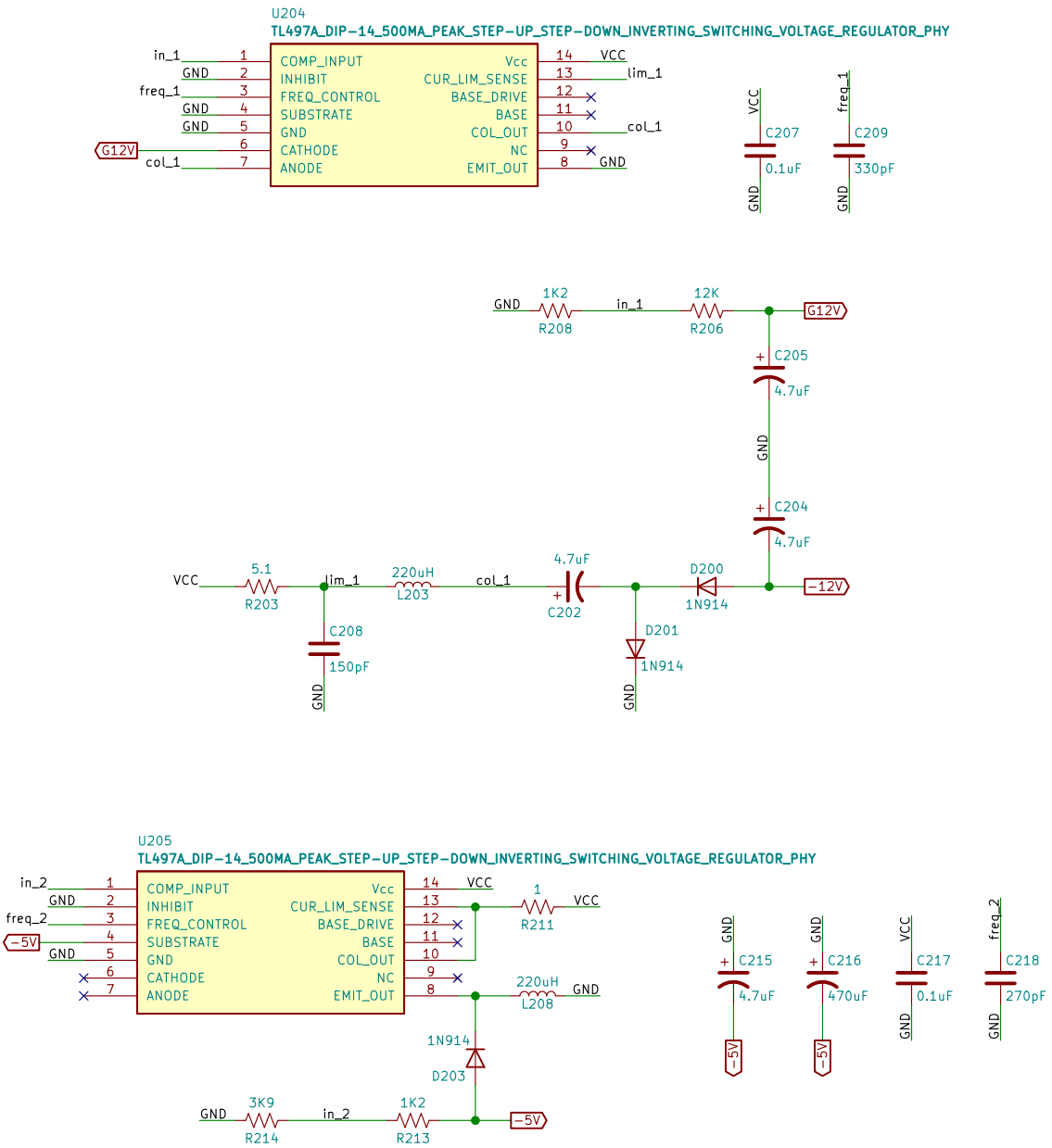

Sheet: /U204 U205 - G12V -12V -5V/
File: subsheet_205.sch

Title:

Size: A4	Date:	Rev:
KiCad E.D.A. kicad 5.1.10-88a1d61d5888ubuntu18.04.1		Id: 14/14